STP系列泛用型計時器

Type	Multi-Range ON Delay Timer		Multi-Range Flicker	
Model	STPN-M□	STPY-M□	STPN-FK-M3	STPY-FK-M3
Figure				
Range	M1 : 1S / 10S / 1M / 10M M3 : 3S / 30S / 3M / 30M M6 : 6S / 60S / 6M / 60M M1H : 1M / 10M / 1H / 10H M3H : 3M / 30M / 3H / 30H M6H : 6M / 60M / 6H / 60H		3S/30S/3M/30M	
Weight	190g	195g	185g	190g

Specification

Power Supply	12 or 24 VAC / DC or 110 or 230V or 380VAC 50 / 60 Hz
Wattage	3 VA max.
Control Output	Relay
Contact Rated	10A
Repetivity	0.5% of F.S
Setting Accuracy	5% of F.S
Reset Time	0.1Sec Max.
Insulation Strength	100 M Ω / 500 VDC
Dielectric Strength	2.5KV / 1 min
Circumstance	-20° ~ +60° C, 35 ~ 85% RH
Life of Relay	20 X 10^6 Times

Timing Chart

STPN-M□ /STPY-M□

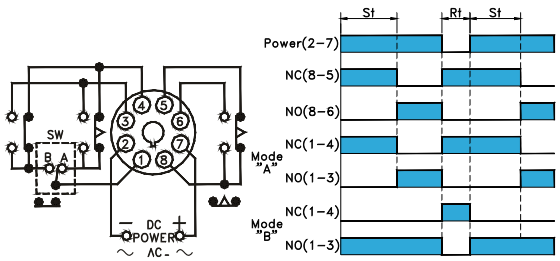

STPN-FK-M□/STPY-FK-M□

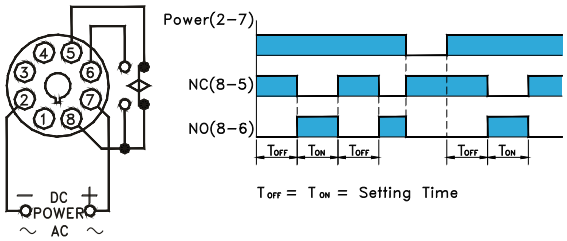

Dimension

STPN

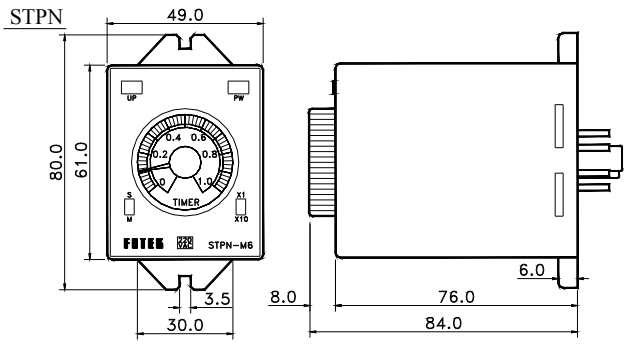
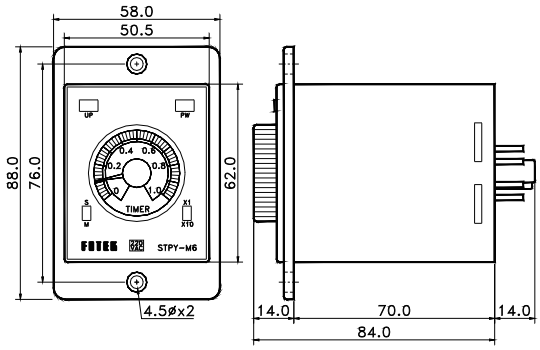
STPY