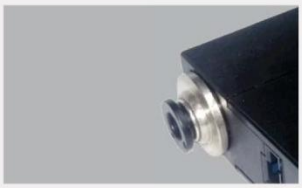

Model LMF4000

SIARGO MEMS FLOW SENSING PRODUCTS

MEMS Mass Flow Meters

VB.6

Contents

Features..... 2
Introduction..... 2
Applications..... 2
Working Principle and Package..... 3
Schematic of Electronics 3
The Meters 4
Specifications..... 4
Description..... 4
Dimensions..... 5
Product Selection..... 5
Installation and User Interface..... 5
Running Mode..... 6
Instant flow rate mode
Flow accumulation mode
Maximum / minimum mode
Menu Setting Mode..... 7
Keyboard lock
Flow accumulation reset
Automatic offset calibration
Response time setting
Display refresh setting
Maximum / minimum flow rate record clearing
System default retrieval
Decimal setting
Safety and Maintenance..... 9
Wetted materials and compatibility
Safety precautions
Appendix RS232 Communication Protocol..... 10

Model LMF4000

Features

- Designed for gas flow in fixed flow channel of 3 mm and 8 mm, with accumulated flow
- Compact design ready for manifold applications
- Fast response time provides solutions for critical applications
- Excellent for electronic meters in anesthesia equipments
- Exchangeable mechanical connectors for easy installation at different applications
- Intrinsic safe enclosure for wide applications
- Low power consumption, can be operated by battery

Introduction

LMF4000 Series mass flow meters are designed for applications in gas flow within a flow channel diameter of 3 mm and 8 mm, respectively. The compact design provides user friendly installation for multiple flow channel sensing requirements. Plastic finishing with an easy change of the mechanical adaptors enables applications with different connection thread requirements or one-touch approach. The meters can be used for electronic meters in anesthesia equipments, environmental samplers and many other industrial applications.

The meters can be customized with flow range, gas specific requirements, user interface and others upon requests to the manufacturer.

Applications

Environmental Monitoring

- Aeration cable
- Gas generated plasma monitor
- Vacuum applications
- Preservation of oxygen devices
- Anesthesia
- Ventilator
- Ventilation equipment detection devices
- Other industrial applications such as welding

Working Principle and Package

The MEMS calorimetric sensor is installed at the flow channel wall forming a plate that serves as an additional flow conditioner from the boundary layer configuration resulting in a laminar flow. The mass flow measurement is established as the fluid carries heat away from the heater causing the redistribution of the temperature field. Accurate flow rate is obtained by calibration with the standard fluid at the preset conditions.

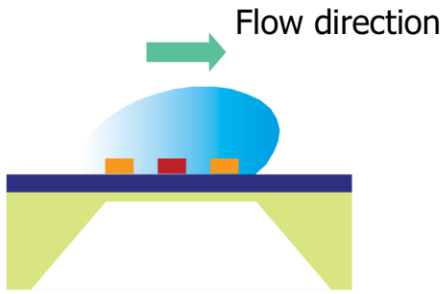

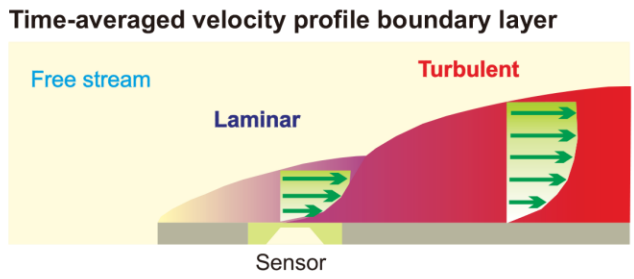

Schematic of Electronics

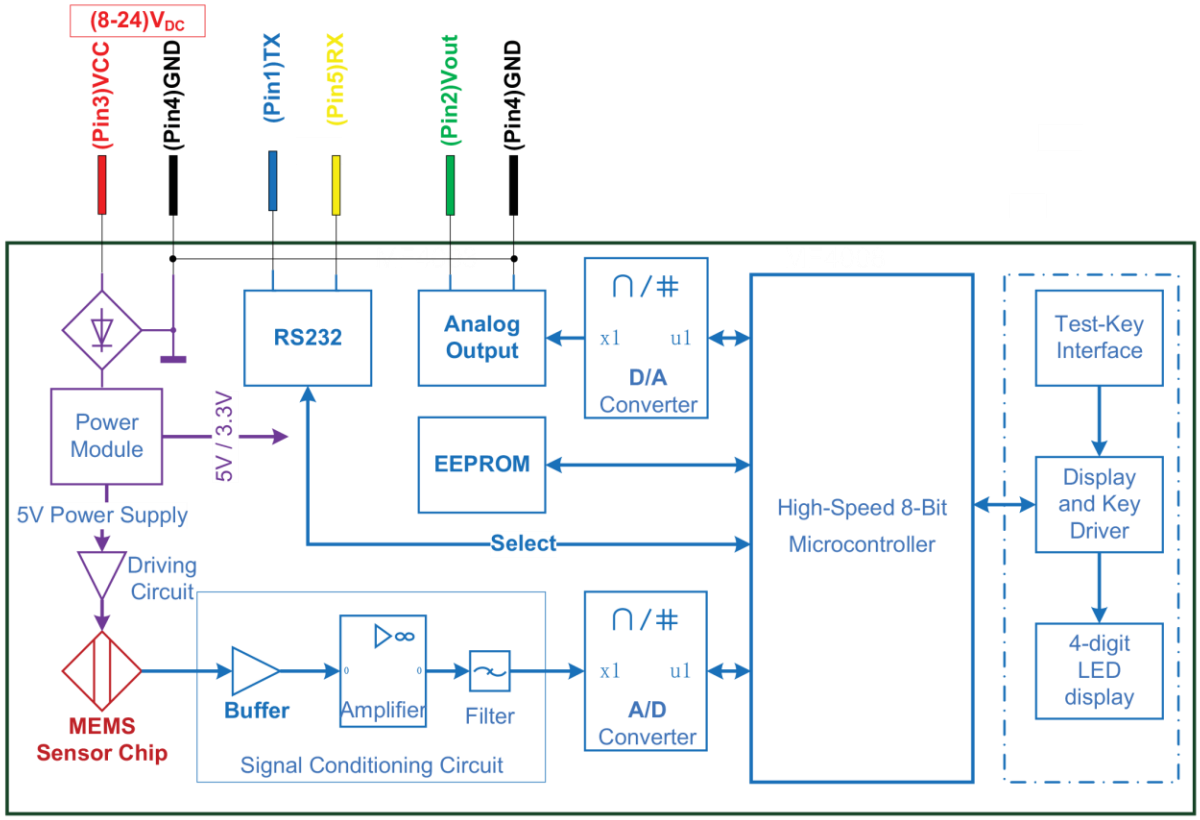

The Meters

The meters is packaged into the standard poly-carbonate enclosure with which the maximum detectable mass flow rate can be customized within 2 SLPM to 50 SLPM by modification of the circuitry so that the various flow can be achieved to meet customers' best requirements. The calibration is done with air at 20°C and 1 bar pressure. It can nonetheless be calibrated at other customer specific conditions upon requests.

Specifications

	LMF4003	LMF4008	
DN	3	8	mm
Flowrate Range	0 ~ 2, 3, 4, 5	0 ~ 10, 20, 30, 40, 50	SLPM
Turn-down	>100:1		
Accuracy	±(1.5+0.2FS)		%
Repeatability	0.25		%
Null Shift	±30		mV
Output Shift	0.12		% / °C
Response Time	100 (Default, 10, 20, 50, 200 ,500, 1000 selectable)		ms
Power Supply	8~24Vdc, 50mA		
Output	Linear; RS232 / RS485, Analog 0.5~4.5Vdc		
Display	4-digit, 7-segment LED , 2 Status LED		
Units	Instant flow rate: SLPM; Flow accumlation: SL		
Display Resolution	0.001, 0.01, 0.1 selectable	0.01, 0.1 selectable	SLPM
Pressure Drop	100	600	Pa
Max. Pressure	0.5		MPa
Working Temperature	-10~+55		°C
Storage Temperature	-20~+65		°C
Humidity	<95%RH (No icing or condensation)		%RH
Mechanical Connection	BSPT 1/4 (R 1/4), 4mm / 6mm / 8mm One-touch	BSPT 1/4 (R 1/4)	
Keyboard	3 keys		
Pins Out	5 Pins, NS-TECH CD R-5		
Calibration	Air @ 20°C,101.325kPa		
Package	Polycarbonate		
Weight	55 (with BSPT 1/4 (R 1/4) connection) 74(with O4,O8 connection), 71(with O6 connection)		g

Description

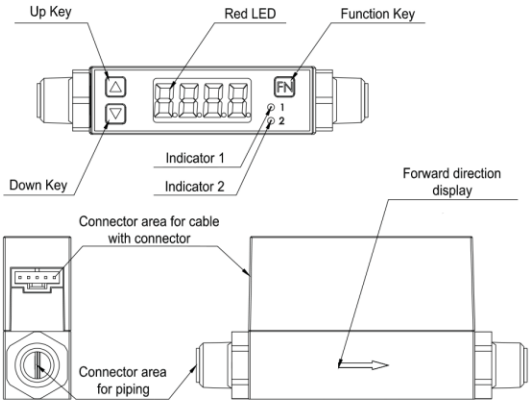

Dimensions

For R 1/4 connection

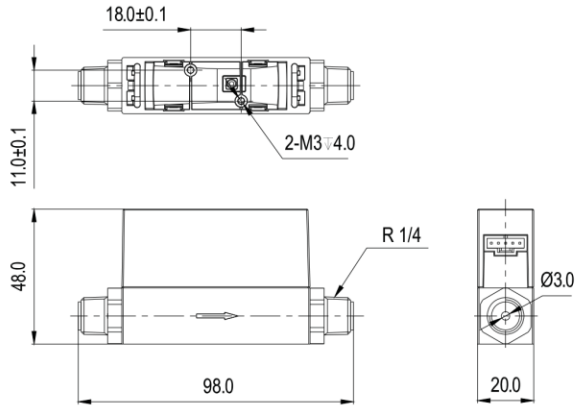

LMF4003

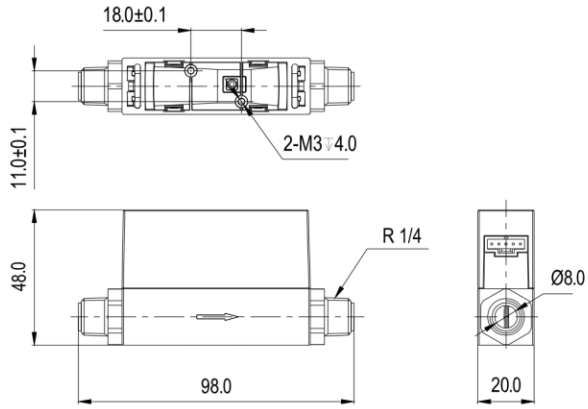

LMF4008

For One-touch connection

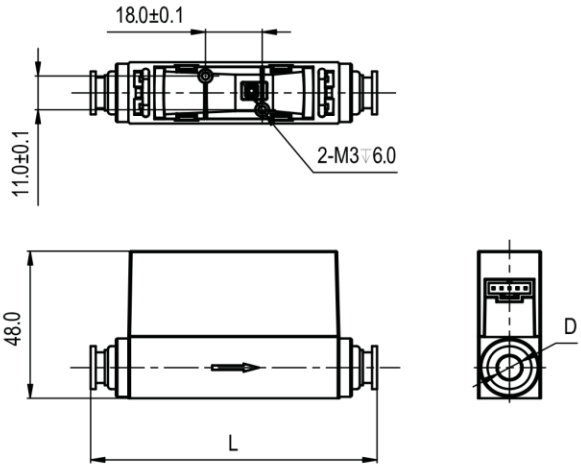

One-touch Connection	L	D
ID=8mm	91.0	Φ8.0
ID=6mm	83.0	Φ6.0
ID=4mm	80.0	Φ4.0

Product Selection

LMF40 □-□-□-□-□

- Gas (A - air; B - N_2O; C- CO_2; N - N_2; O - O_2; R - Ar; for other gases, please contact Siargo)
- Output*** (B - RS485; C - RS232; V - analog output; Options: V / BV / CV)
- Mechanical connection** (R - BSPT 1/4 (R 1/4); O4/O6/O8 - 4 mm/6 mm/8 mm one-touch connector; for LMF4003 - R, O4, O6 and O8 selectable; for LMF4008 - R selectable.)
- Max. Flow Rate* (for LMF4003 - 2, 3, 4 or 5 SLPM; for LMF4008 - 10, 20, 30, 40 or 50 SLPM)
- Product Series Name (03-DN3,08-DN8)

* Max. flow rate number only, for example, 5 meaning full scale flow rate of 5 SLPM.
For CO_2 and N_2O, selectable: 2, 3 or 4 SLPM (without 5 SLPM) for LMF4003; 10, 20, 30 or 40 SLPM (without 50 SLPM) for LMF4008;

** The meter standard output is analog. Digital outputs are optional.

Installation and User Interface

The product at the time of shipment is fully inspected for product quality and meets all safety requirements. Additional safety measures during the installation should be applied. This includes, but is not limited to leakage verification procedures if applicable, standard ESD (electrostatic discharge) precautions, and DC voltage precautions. Other tasks such as calibration, part replacement, repair, and maintenance must only be performed by trained personnel. Upon requests, manufacturer will provide necessary technical support and/or training of the personnel.

Do not open the product cover or alter any part of the product. Any such actions will forfeit the terms of the warranty and cause the liability to any damages thereafter.
The interface is defined in the table below:

Pin	Colour	Definition
1	Blue	TX, RS232 Transmit (output) / RS485B
2	Green	Vout, Analog output
3	Red	VCC, Power supply (8 - 24 Vdc)
4	Black	GND, Ground
5	Yellow	RX, RS232 Receive (input) / RS485A

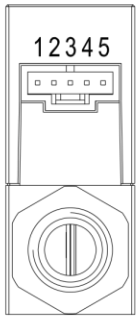

NOTE: Upon open the package, if any component listed above is missing or any visible mechanical damage is found, please contact supplier or distributors immediately. For additional assistance of installation, please contact supplier or customer service.

Running Mode

The display consists of a 4-digit LED panel and two LED indicators (i.e., I-LED and II-LED). Under the running mode, the 4-digit LED panel will show Instant flow rate, flow accumulation, or maximum/minimum flow rates. There are three different display modes: instant flow rate mode, flow accumulation mode, and maximum/minimum mode. The two LED indicators will illustrate which display mode is undergoing.
F

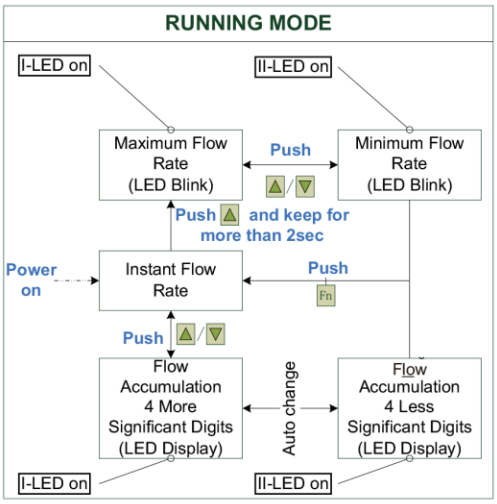

•**Instant flow rate mode**

1. This is the default display mode, in which the two LED indicators are off.
2. The instant flow rate is displayed by the 4-digit LED panel with one decimal digit available. The flow rate unit is SLPM.
3. When the flow rate exceeds the maximum allowable flow rate, I-LED will blink.
4. When the flow rate exceeds the minimum allowable flow rate, II-LED will blink.

5. When the flow rate exceeds the maximum displayable reading, both I-LED and II-LED will blink simultaneously, which implies that the reading is incorrect (since the reading has been rounded off to fit the display, although the measurement may still be correct).

•**Flow accumulation mode**

1. In this display mode, the two LED indicators are turned on.
2. The flow accumulation is displayed as an 8-digit numeric number in a time-division scheme. When the first LED indicator (I-LED) turns on, the 4-digit LED panel displays the more significant digits of the flow accumulation. After 1 second, the second LED indicator (II-LED) turns on and the 4-digit LED panel displays the less significant digits of the flow accumulation.
3. The flow accumulation unit is SL. The flow accumulation reading can be reset to zero by a key operation.

NOTE: The flow accumulation will be saved every 3 minutes. For instance:

1, The flow accumulation will not be saved if power off @ 2 minutes.

2, The flow accumulation will be the value of 33 minutes if power off @ 34 minutes.

•**Maximum / minimum mode**

1. In this mode, the maximum flow rate and the minimum flow rate (since the last power-on or the last maximum/minimum flow rate resetting) will be displayed.
2. When the maximum flow rate is shown, I-LED will turn on and the 4-digit LED panel will blink.
3. When the minimum flow rate is shown, II-LED will turn on and the 4-digit LED panel will blink.

Menu Setting Mode

Under the menu setting mode, various operations including keyboard lock/unlock, flow accumulation reset, automatic offset calibration, gas selection, response time setting, display refresh setting, maximum/minimum flow rate reset can be performed.

•**Keyboard lock**

1. Prevent unintentional modifications of system parameters.
2. After the keyboard is locked, the user will be unable to perform any other menu settings unless the keyboard is unlocked by the user.

•**Flow accumulation reset**

Reset the flow accumulation reading to 0 SL, and the flow accumulation counts re-starting at 0 SL.

•**Automatic offset calibration**

Perform offset calibration, which is used for resolving the possible offset drifting after certain period of operation.

NOTE: Before performing automatic offset calibration, please ensure that the gas in the pipe is static, i.e., at zero flow. Otherwise, it may cause inaccuracy during the measurement.

MENU SETTING MODE

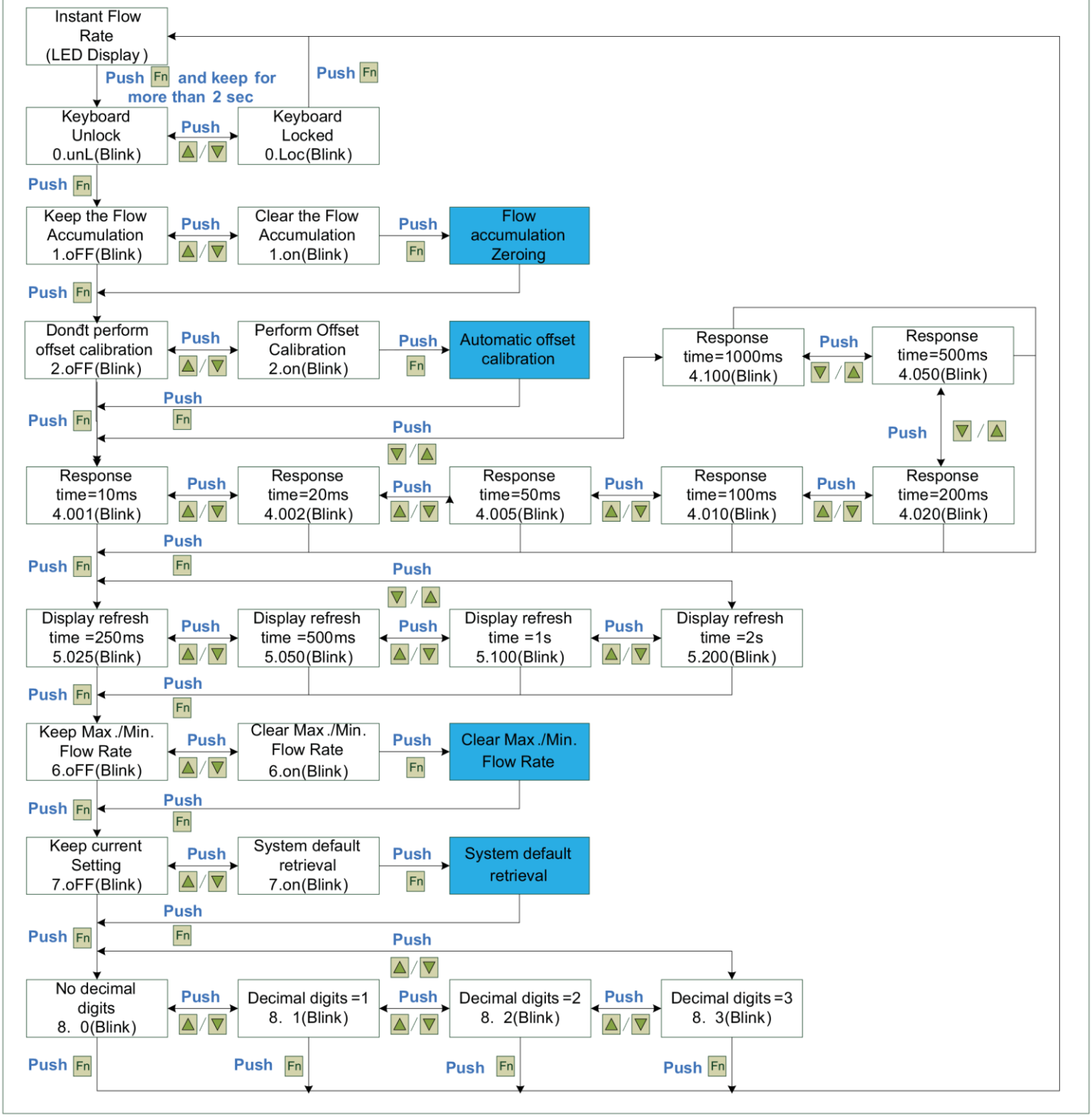

•**Response time setting**

1. Set the response time of the analog output signal;
2. Set the time interval for the digital output signal;
3. After each setting is completed, it is in effect immediately. However, it is stored in the internal EEPROM only when a new menu operation is invoked. If the power is off before a new menu operation is invoked, the setting will be discarded without being stored.

Display	4.001	4.002	4.005	4.010	4.020	4.050	4.100
Response Time	10 ms	20 ms	50 ms	100 ms	200 ms	500 ms	1000 ms

•**Display refresh setting**

1. Set the time interval for the display refresh;
2. After each setting is completed, it is in effect immediately. However, it is stored in the internal EEPROM only when a new menu operation is invoked. If the power is off before a new menu operation is invoked, the setting will be discarded without being stored.

Display	5.025	5.050	5.100	5.200
Refresh Time	250 ms	500 ms	1000 ms	2000 ms

•**Maximum / minimum flow rate record clearing**

1. Reset the maximum/minimum flow rate register, and the maximum/minimum flow rates will be re-starting from the initial state.
2. The maximum/minimum flow rate record will be automatically reset when the meter is power off.

•**System default restore**

Reset all the system parameters to the default values specified in the factory.

•**Decimal setting**

Set the number of decimal digits.

NOTE: The maximum number of decimal digits is depended on the maximum flow rate. For example, when the maximum flow rate is 10,20,30,40,50 L/min, the number of decimal digits can be at most 2, e.g., 49.99 L/min.

Safety and Maintenance

•**Wetted materials and compatibility**

The meter body is made of medical compatible plastics. Sensor comprise of silicon, silicon nitride and silicon dioxide and the sensor surfaces are passivated with silicon nitride and silicon dioxide. The electronic sealing is provided by RTV (room temperature vulcanizing) silicone sealant WR-704 composed of HOCH3 (SiO) nCH3H.

Appendix RS232 Communication Protocol

• Serial Port Settings

PROPERTIES			RS232	RS485
Physical interface			TIA/EIA-232-E	TIA/EIA-485-A
Transmission cable			3-core shielded cable	
Cable length			≤ 3m	≤ 1200m
Communication interface			UART, Half-duplex	
Data link protocol			point to point	point to point; point to multiple
Port Setting	Baud rate (Bits per second)		38400 bps	
	Data bits		8 bits	
	Parity	Frame_header	1 bit Mark	
		Others	1 bit Space	
	Stop bits		1 bit	
	Flow control		None	
Error checking method			XOR	

• Protocol Structure

This protocol includes three working layers: physical layer, data link layer, and user layer.

Physical layer protocol

Every byte contains 11bits, which is defined as follows:

Start_bit D0 D1 D2 D3 D4 D5 D6 D7 D8 Stop_bit

a) Start_bit:

1bit, a logic low;

b) Data bits (D0~D7):

8 bits, representing the data byte under transmission, which is ordered from the least-significant digit to the most-significant digit;

c) Frame_header flag (D8):

1bit, a flag to indicate whether the data byte under transmission is a type of datum or frame_header.

* When transmitting a frame_header (or address) from master, D8 must be set to 1. When transmitting another datum (such as command code, data length, data segment, checksum or frame_end), D8 can be set to 0 or 1. We suggest customer set D8 to 0, when transmitting other datum;

* For the byte sent from LMF4000, D8 is always 0;

d) Stop_bit:

1bit, a logic high.

Data link layer protocol

Both the master and slave (LMF4000) have the same frame format, each byte of which is hexadecimal (non-ASCII code). Specifically, the frame format is defined as below:

Frame_header	1 byte
Command code	1 byte
Length	1 byte
Data	Variable-length
Checksum	1 byte
Frame_end	1 byte

a) Frame_header:

For RS-232, this frame header is a constant byte: 0x9D, representing the start of a data frame.

For RS-485, this frame header is the address of the slave under query (i.e., the salve device to whom the data is sent). If the slave responds, the slave will need to return its own slave address. The allowable slave address code is an integer between 1~128. When this frame header is set to 0, it is in the broadcast mode, in which all the slave devices will be in effective to accept the data but not be allowed to return their addresses after receiving the data.

b) Command code:

The commend code, an integer between 0 and 255 excepting 0x9D, defined in the User Layer to achieve various functionality.

c) Length:

The length of the data, an integer between 0 and 102 depending on the commend code. If the command code has no data, the length should be 0. If the LMF4000 unit detects the length larger than 102, the LMF4000 unit will not send any response;

d) Data:

The body of the data, whose length varies depending on the command code. If the command code has no data, the length should be 0;

e) Checksum:

XOR;

f) Frame_end:

0x0D;

g) Overtime

1sec. This is to prevent LMF4000 from running into a deadlock because of the master failures or communication failures. When LMF4000 receives a correct byte, a timer will begin. If LMF4000 does not receive other correct byte within 1sec, it will interrupt the communication and prepare to receive next byte. The interval time from LMF4000 to the master is less than 10msec (which can be used for the master to judge the overtime).

Appendix RS232 Communication Protocol

User layer protocol

Command Code	F0	Read instant flow rate
Master query	9D F0 01 08 CRC 0D	
LMF4000 response	9D F0 03 FRH FRM FRL CRC 0D	
Description	3 bytes. FR (Instant flow rate) = （FRH * 65536 + FRM * 256 + FRL）/ 1000； Unit: SLPM, Decimal digits: 3.	
Command Code	FF	Read the sensor series number
Master query	9D FF 00 CRC 0D	
LMF4000 response	9D FF 0C SN1 SN2 SN3 SN4 SN5 SN6 SN7 SN8 SN9 SN10 SN11 SN12 CRC 0D	
Description	12 bytes. It is the series number of the sensor made up of 12 ASCII characters.	
Command Code	02	Change the response time
Master query	9D 02 02 RTH RTL CRC 0D	
LMF4000 response	9D 02 01 STATE CRC 0D	
Description	1 byte. Unit: msec. RT (response time) = RTH * 256 + RTL； Selectable: 10, 50, 100, 200, 500 and 1000. STATE: if the operation is successful, STATE = 1, otherwise STATE = 0.	
Command Code	03	Change the GDCF of the sensors
Master query	9D 03 02 GDCFH GDCFL CRC 0D	
LMF4000 response	9D 03 01 STATE CRC 0D	
Description	1 byte. GDCF = GDCFH * 256 + GDCFL. STATE: if the operation is successful, STATE = 1, otherwise STATE = 0.	
Command Code	72	Calibrate sensor offset （Auto）
Master query	9D 72 01 55 CRC 0D	
LMF4000 response	9D 72 02 OFFSETH OFFSETL CRC 0D	
Description	2 bytes. Ensure there is no flow in the sensor pipe during calibrating offset. Offset = OFFSETH * 256 + OFFSETL. The normal range is from -32767 to +32767.	
Command Code	78	Reset all the parameters to default.
Master query	9D 78 01 55 CRC 0D	
LMF4000 response	9D 78 01 STATE CRC 0D	
Description	1 byte. Reset all the parameters to default (Automatic) 1, Reset the default response time (10msec); 2, Reset the default GDCF (1000); 3, Reset the default offset.	

Command Code	82	Read the response time
Master query	9D 82 00 CRC 0D	
LMF4000 response	9D 82 02 RTH RTL CRC 0D	
Description	2 bytes. RT (response time) = RTH * 256 + RTL；	
Command Code	83	Read GDCF
Master query	9D 83 00 CRC 0D	
LMF4000 response	9D 83 02 GDCFH GDCFL CRC 0D	
Description	2 bytes. GDCF = GDCFH * 256 + GDCFL.	
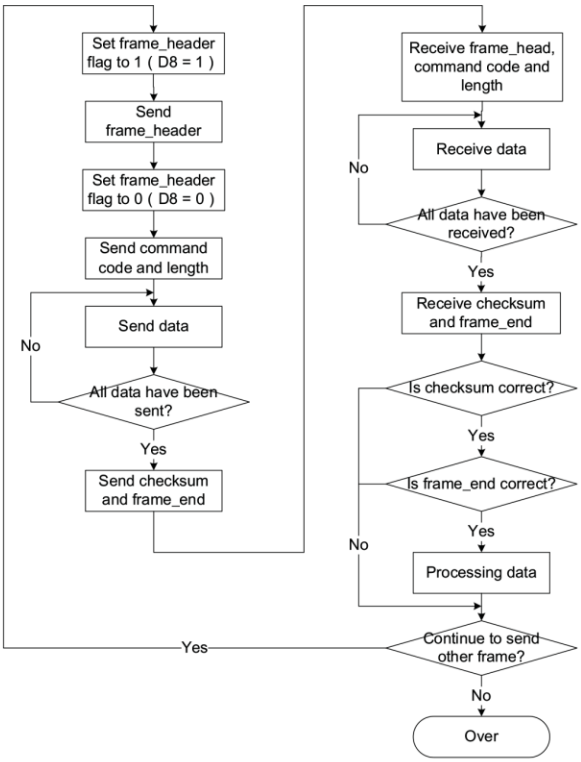
- **Flow chart (master to LMF4000)**